Item	Name	Q.ty
1	CA.08.14.013	1
2	GZA.10.12.1.L	1
3	GZA.10.12.2	2
4	GZA.10.12.5	2
5	GZA.10.12.9	2
6	GZA.10.12.3.L90D	1
7	GZA.10.12.3.L90S	1
8	M.6x25.SH	1
9	PSP.1269255	2
10	V.STM3X5	2

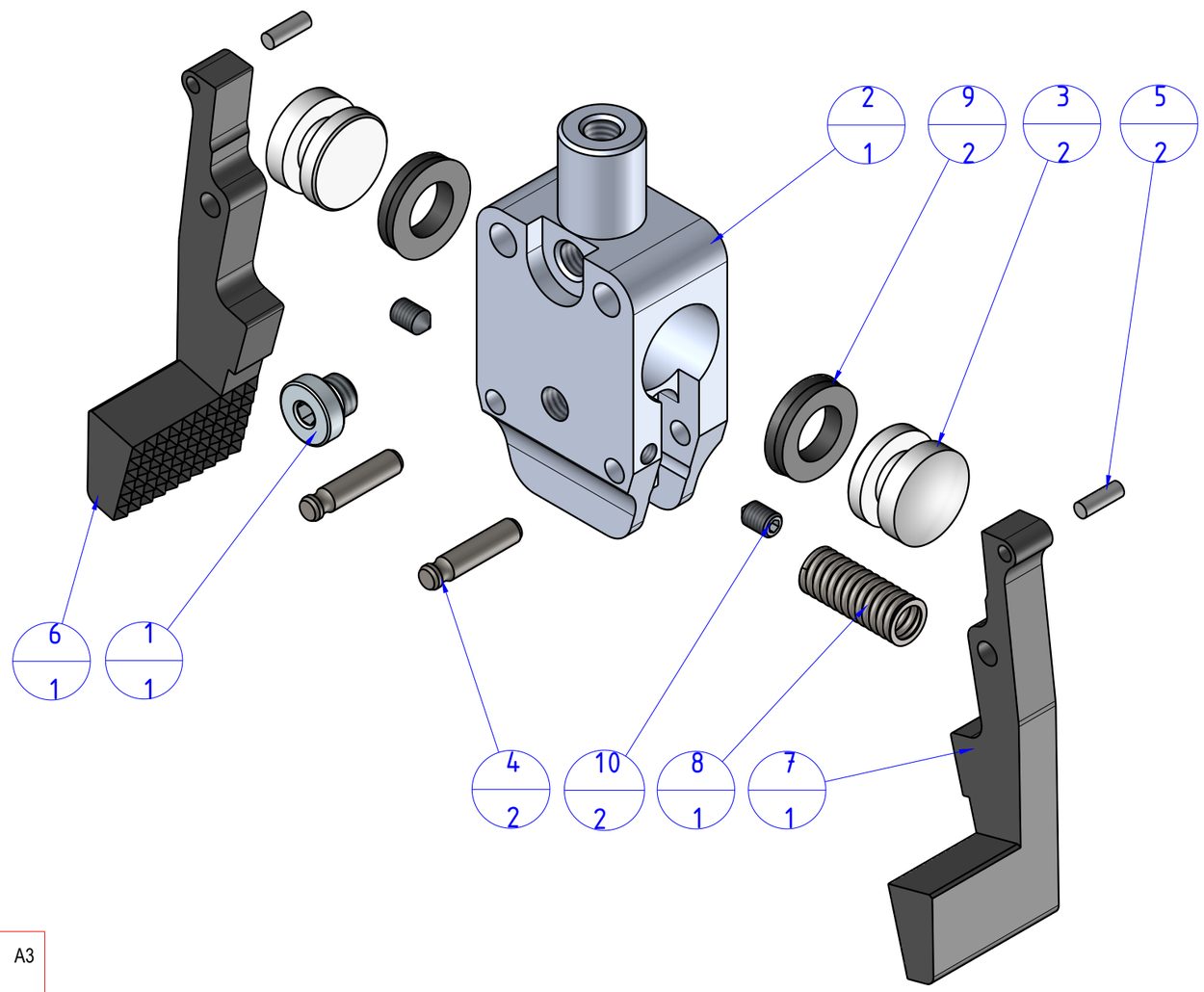

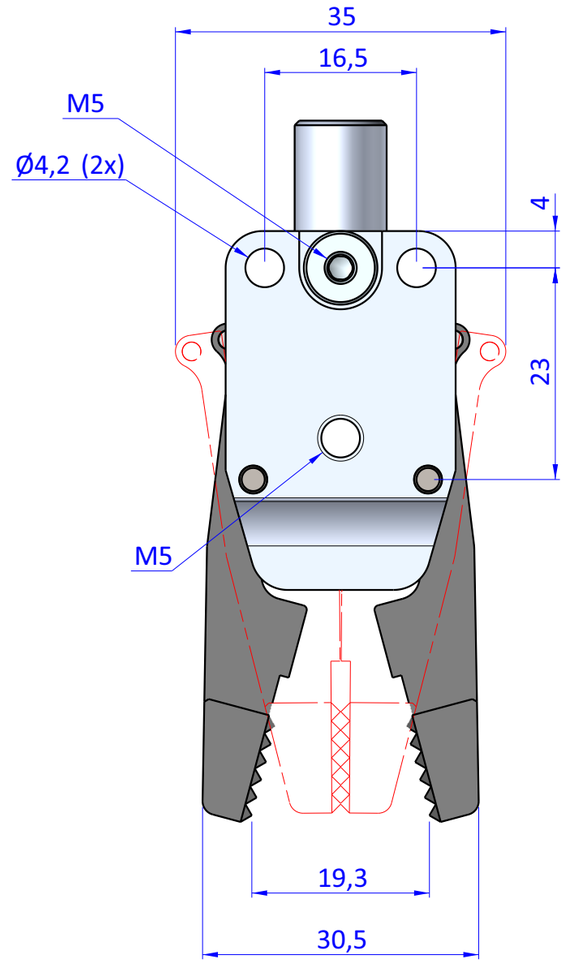

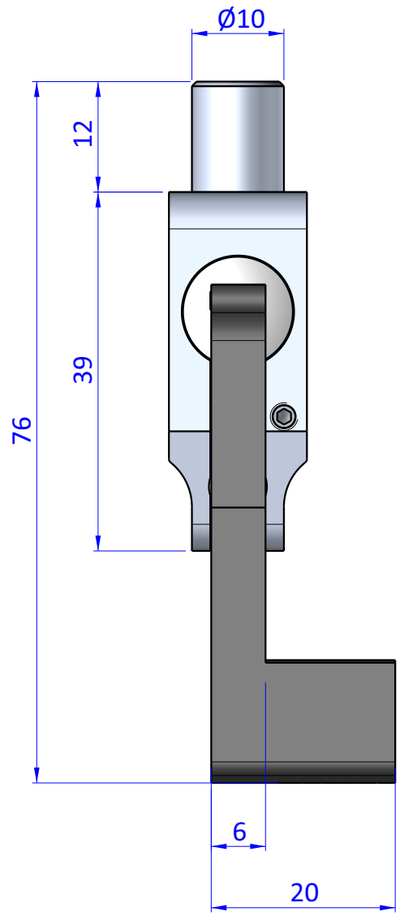

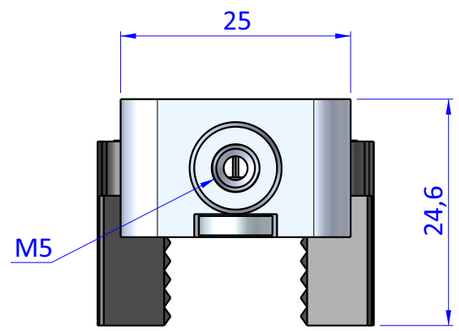

THE PROPERTY OF THE DRAWING IS ESTABLISHED BY LAW. IT IS FORBIDDEN TO PRODUCE OR SHOW IT TO THIRD PART, WITHOUT A WRITTEN AGREEMENT.

Format A3

UNI 936-76

FPS
FPSERVICES AUTOMATION

GENERAL TOLERANCE UNI - ISO 2768 CLASSE f	DESCRIPTION CA.GZA.10.12.L90	DESIGNED FROM FPS Automation	REVIEW A
		DATE 07/04/2020	WEIGHT 0,043kg
		CODE CA.GZA.10.12.L90	